Computer Networks

Fall 2024 Semester

Course Code: CS – 3001

Offered to BCS22 – 5K, BDS21 – 7C

Course Instructor: Aftab Alam

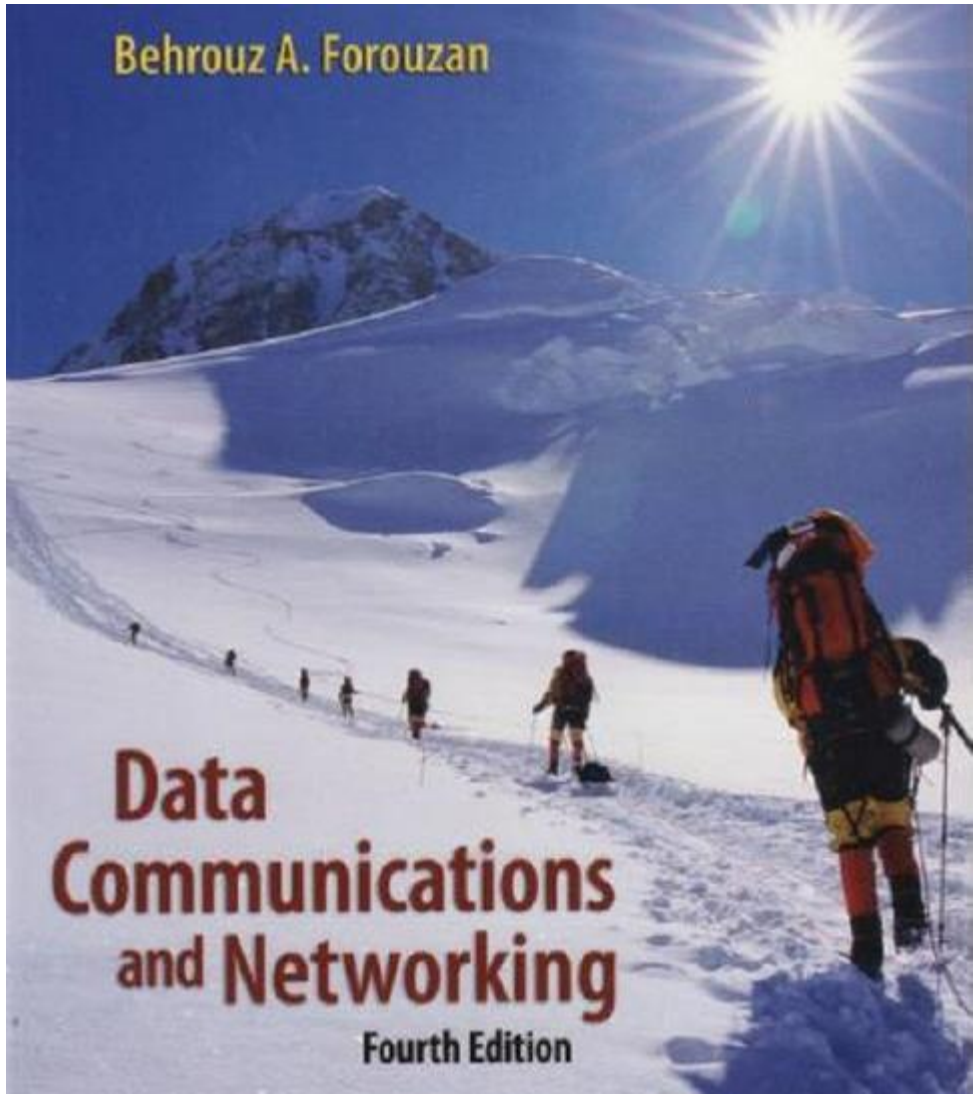

Network Layer:

LOGICAL ADDRESSING

Lecture 17

IP addressing: Subnet mask

- **IPv4 address** has two components, the network part and the host part.
- **The purpose of subnet mask** is to identify which part is the **network part** and which part is the **host part**.
- **Subnet mask: A** 32 bit number where
- all the bits of the network part are shown as 1 and
- all the bits of the host part are represented as 0.
- **For example**, for a **Class C Network**, 192.168.10.0, the subnet mask is **255.255.255.0**
- The “255” address is always assigned to a broadcast address, and the “0” address is always assigned to a network address. Neither can be assigned to hosts, as they are reserved for these special purposes.
- Class A: 255.0.0.0
- Class B: 255.255.0.0
- Class C: 255.255.255.0

Network Addresses Examples

- **Question:** Given the address **23.56.7.91**, find the **network address**.
  - **Answer:**
  - **Network Mask (for Class A) is 255.0.0.0**
  - So, the network address is **23.0.0.0**.

- **Question:** Given the address **132.6.17.85**, find the **network address.**
  - **Answer:**
  - **Network Mask (for Class B) is 255.255.0.0**
  - Thus, the network address is **132.6.0.0.**

Subnet and sub-netting

- **In sub-netting,** a class A or class B or class C block is divided into several subnets
- each subnet with larger prefix length than the original network).
- **For example,** divide the **class A** into **four subnets**, (take two bits from host id part in order to obtain subnets).then each subnet will have prefix length as 10

Subnet and Sub-netting

- A logical, visible subdivision of an IP network is called **subnet** or **subnetwork:** It is created by dividing the host identifier

- ➢**Sub-netting** is the practice of dividing a network into two or more networks
- ➢**Sub-netting** is done by taking the bits from host part and adding it to the network part

Subnet Example

Given the IP address 173.234.198.213/20.

(a) What is the subnet id?

(b) What is the usable hosts range? (starting and ending hosts IP addresses on the subnetwork).

(a) Subnet ID: **173.234.192.0**

(b) Usable hosts range: **173.234.192.1** to **173.234.207.254**

Subnet Example

Given the host IP address 101.53.234.124/14.

(a) Find the subnet mask for the network?

(b) How many hosts can be connected to this network?

Network, First, Last, Broadcast Addresses

- **Network address:** If all the bits in the host part are "0", that represents the network id
- **First usable IPv4 address:** If all the bits in the host part are "0" except the last bit
- **Last usable IPv4 address :** If all the bits in the host part are "1" except the last bit
- **Broadcast address:** If all the bits in the host part are "1"

Example 1

- What is the first address in the block if one of the addresses is ***167.199.170.82/27?***
- ***Solution:*** The prefix length is 27, which means that we must keep the first 27 bits as is and change the remaining bits (5) to 0s.

Address in binary: 10100111 11000111 10101010 01010010
Keep the left 27 bits: 10100111 11000111 10101010 01000000
Result in CIDR notation: 167.199.170.64/27

Example 2

- What is the first address in the block if one of the addresses is 140.120.84.24/20?
- Number of addresses,
- First usable address in the block?
- Last useable address in the block?
- Broadcast address?

The first address is 140.120.80.0/20

Class C sub-netting

- Consider class C network 192.168.10.0 (subnet mask is 255.255.255.0)
- If we include one bit from the host part to the network part, the subnet mask changes into 255.255.255.128 (for 1 bit sub-netting)
- The single bit can have two values in last octet, either 0 or 1
- 11000000.10101000.00001010.**0** | 0000000
  11111111.11111111.11111111.**1** | 0000000
- So the network 192.168.10.0 is divided into two networks with a single bit sub-netting, each network has 128 total addresses of which 126 are usable two are used in each subnet to represent the network address and broadcast address.

Class C 2-bit sub-netting

SN No.	Description	Binaries	Decimal
1	NA	11000000.10101000.00001010.00000000	192.168.10.0
	1st	11000000.10101000.00001010.00000001	192.168.10.1
	Last	11000000.10101000.00001010.00111110	192.168.10.62
	BA	11000000.10101000.00001010.00111111	192.168.10.63
2	NA	11000000.10101000.00001010.01000000	192.168.10.64
	1st	11000000.10101000.00001010.01000001	192.168.10.65
	Last	11000000.10101000.00001010.01111110	192.168.10.126
	BA	11000000.10101000.00001010.01111111	192.168.10.127
3	NA	11000000.10101000.00001010.10000000	192.168.10.128
	1st	11000000.10101000.00001010.10000001	192.168.10.129
	Last	11000000.10101000.00001010.10111110	192.168.10.190
	BA	11000000.10101000.00001010.10111111	192.168.10.191
4	NA	11000000.10101000.00001010.11000000	192.168.10.192
	1st	11000000.10101000.00001010.11000001	192.168.10.193
	Last	11000000.10101000.00001010.11111110	192.168.10.254
	BA	11000000.10101000.00001010.11111111	192.168.10.255

Class B 2-bit sub-netting

SN No.	Description	Binaries	Decimal
1	NA	10101100.00010000.00000000.00000000	172.16.0.0
	1st	10101100.00010000.00000000.00000001	172.16.0.1
	Last	10101100.00010000.00111111.11111110	172.16.63.254
	BA	10101100.00010000.00111111.11111111	172.16.63.255
2	NA	10101100.00010000.01000000.00000000	172.16.64.0
	1st	10101100.00010000.01000000.00000001	172.16.64.1
	Last	10101100.00010000.01111111.11111110	172.16.127.254
	BA	10101100.00010000.01111111.11111111	172.16.127.255
3	NA	10101100.00010000.10000000.00000000	172.16.128.0
	1st	10101100.00010000.10000000.00000001	172.16.128.1
	Last	10101100.00010000.10111111.11111110	172.16.191.254
	BA	10101100.00010000.10111111.11111111	172.16.191.255
4	NA	10101100.00010000.11000000.00000000	172.16.192.0
	1st	10101100.00010000.11000000.00000001	172.16.192.1
	Last	10101100.00010000.11111111.11111110	172.16.192.254
	BA	10101100.00010000.11111111.11111111	172.16.192.255

IP addressing: CIDR

- A system called **Classless Inter-Domain Routing** (CIDR), was developed as an alternative to traditional subnetting. You can add a specification in the IP address itself as to the number of significant bits that make up the routing or networking portion.
- For example, we could express the idea that the IP address 192.168.0.15 is associated with the netmask 255.255.255.0 by using the CIDR notation of 192.168.0.15/24. This means that the first 24 bits of the IP address given are considered significant for the network routing.

IP addressing: CIDR

CIDR: Classless InterDomain Routing (pronounced “cider”)

- subnet portion of address of arbitrary length
- address format: a.b.c.d/x, where x is # bits in subnet portion of address

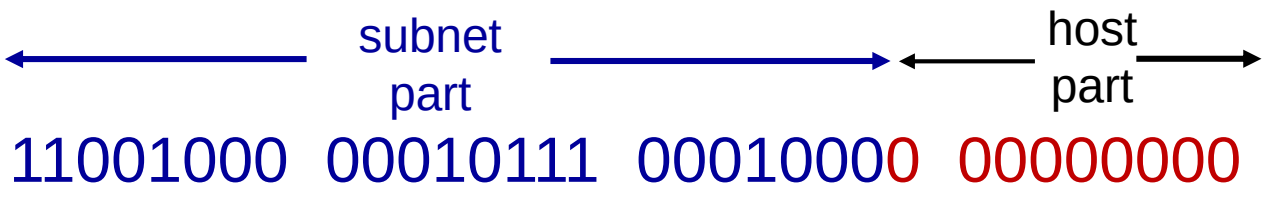

200.23.16.0/23

Prefix Lengths

/n	Mask	/n	Mask	/n	Mask	/n	Mask
/1	128.0.0.0	/9	255.128.0.0	/17	255.255.128.0	/25	255.255.255.128
/2	192.0.0.0	/10	255.192.0.0	/18	255.255.192.0	/26	255.255.255.192
/3	224.0.0.0	/11	255.224.0.0	/19	255.255.224.0	/27	255.255.255.224
/4	240.0.0.0	/12	255.240.0.0	/20	255.255.240.0	/28	255.255.255.240
/5	248.0.0.0	/13	255.248.0.0	/21	255.255.248.0	/29	255.255.255.248
/6	252.0.0.0	/14	255.252.0.0	/22	255.255.252.0	/30	255.255.255.252
/7	254.0.0.0	/15	255.254.0.0	/23	255.255.254.0	/31	255.255.255.254
/8	255.0.0.0	/16	255.255.0.0	/24	255.255.255.0	/32	255.255.255.255

Example

A block of addresses is granted to a small organization. We know that one of the addresses is 205.16.37.39/28.

1. What is the first address in the block?
2. What is the last address in the block?
3. How many addresses this block contain?

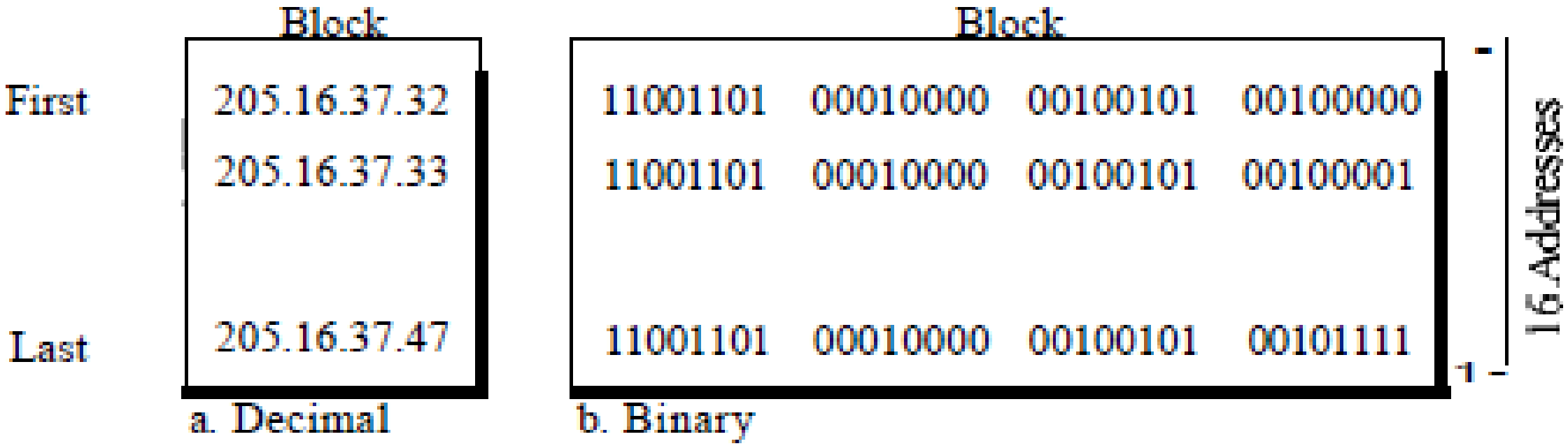

Problem

- A company is assigned the CIDR block 192.168.0.0/24 for their internal network. They want to divide this block into four equal subnets for different departments. What is the new subnet mask for each subnet? List the first and last IP addresses for each subnet.
- **Solution:**
  - 255.255.255.192 (which corresponds to /26)
  - **Subnet 1:Network address: 192.168.0.0**
  - First usable IP: 192.168.0.1
  - Last usable IP: 192.168.0.62
  - Broadcast address: 192.168.0.63
  - **Subnet 2:Network address: 192.168.0.64**
  - First usable IP: 192.168.0.65
  - Last usable IP: 192.168.0.126
  - Broadcast address: 192.168.0.127
  - **Subnet 3:Network address: 192.168.0.128**
  - First usable IP: 192.168.0.129

Example

Find the block if one of the addresses is 190.87.140.202/29.

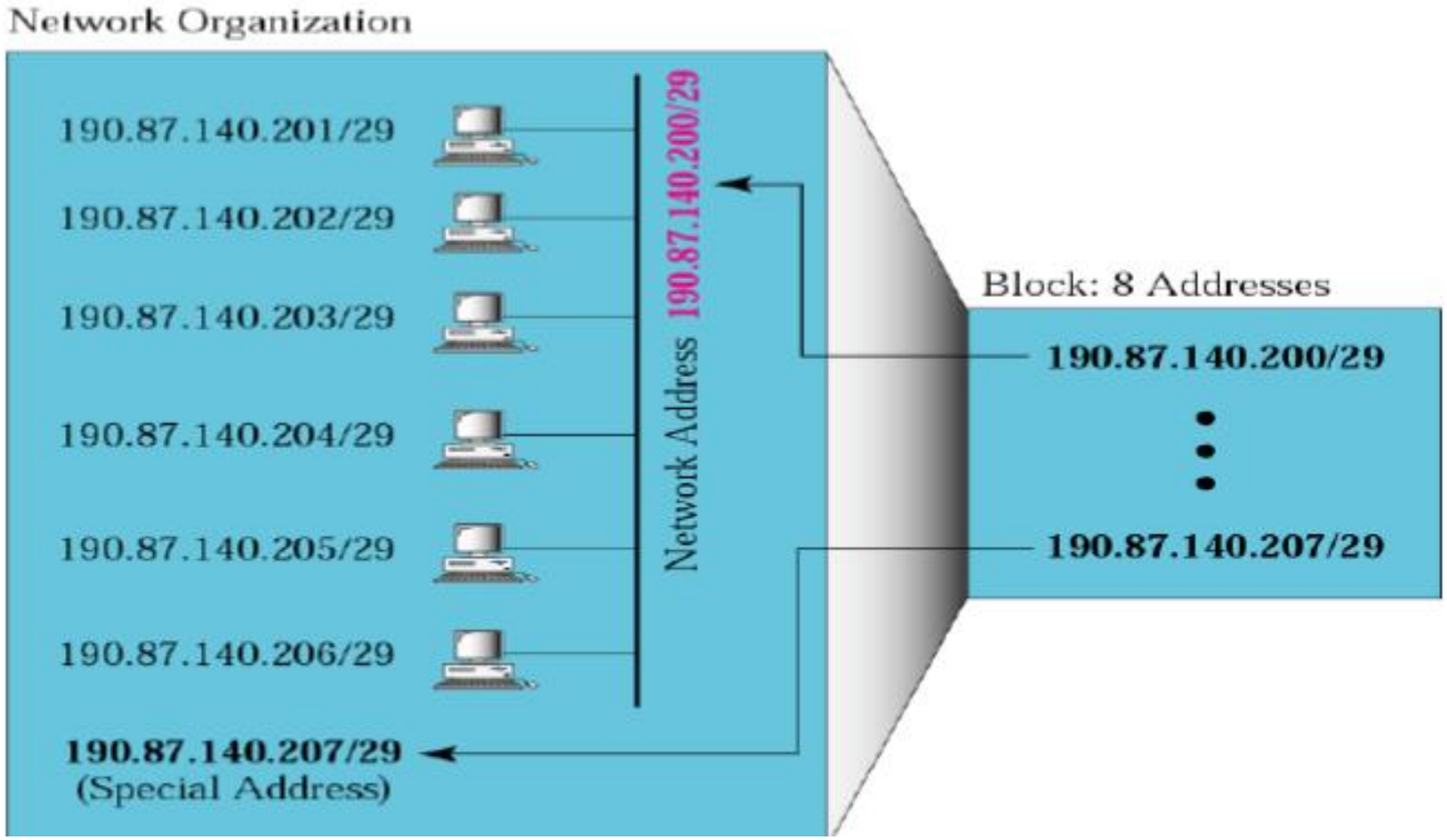

In classless addressing, the last address in the block does not necessarily end in 255.

Variable Length Subnet Mask (VLSM)

- Divide the original network of **192.168.10.0/24** into 4 networks **with VLSM.**

- **FIRST DIVISION**
  - Divide into two networks equally with 128 addresses (126 usable) using subnet mask 255.255.255.128

1. 192.168.10.0/25 [255.255.255.128]
   11000000.10101000.00001010.00000000 [in binary]
   11111111.11111111.11111111.10000000 [subnet mask]

2. 192.168.10.128/25[255.255.255.128]
   11000000.10101000.00001010.10000000
   11111111.11111111.11111111.10000000 [subnet mask]

Variable Length Subnet Mask (VLSM)

- **SECOND DIVISION**
  - Divide second subnet 192.168.10.128/25 (obtained from first division) again into two networks (126 usable)
  - Each with 64 addresses (62 usable) using subnet mask 255.255.255.192 using subnet mask 255.255.255.192

1. 192.168.10.128/26 [255.255.255.192]
   11000000.10101000.00001010.10000000 [in binary]
   11111111.11111111.11111111.**11**000000 [subnet mask]

2. 192.168.10.192/26 [255.255.255.192]
   11000000.10101000.00001010.11000000
   11111111.11111111.11111111.**11**000000 [subnet mask]

Variable Length Subnet Mask (VLSM)

- **THIRD DIVISION**
  - Divide second subnet 192.168.10.192/26 (obtained from second division) again into two networks
  - Each with 32 addresses (30 usable) using subnet mask 255.255.255.224

1. 192.168.10.192/27 [255.255.255.224]
   11000000.10101000.00001010.110000000 [in binary]
   11111111.11111111.11111111.**111**0000 [subnet mask]

2. 192.168.10.224/27 [255.255.255.224]
   11000000.10101000.00001010.11000000
   11111111.11111111.11111111.**111**00000 [subnet mask]

- So, splitting of 192.168.10.0/24 into four subnets using VLSM with unequal number of addresses is done

Example

An organization is granted a block of addresses starting with 17.12.14.0/26 (64 addresses).
The organization needs to have three sub-blocks of addresses to use in its three subnets:

- one sub-block of 32 addresses, and
- two sub-blocks of 16 addresses each.

Design the sub-blocks and find out how many addresses are still available after these allocations.

Subnet 1: 17.12.14.0/27 (32 addresses)
Subnet 2: 17.12.14.32/28 (16 addresses)
Subnet 3: 17.12.14.48/28 (16 addresses)

No addresses are left as all addresses have been allocated.

Solution

Subnet 1: 17.12.14.0/27 (32 addresses)
Subnet 2: 17.12.14.32/28 (16 addresses)
Subnet 3: 17.12.14.48/28 (16 addresses)

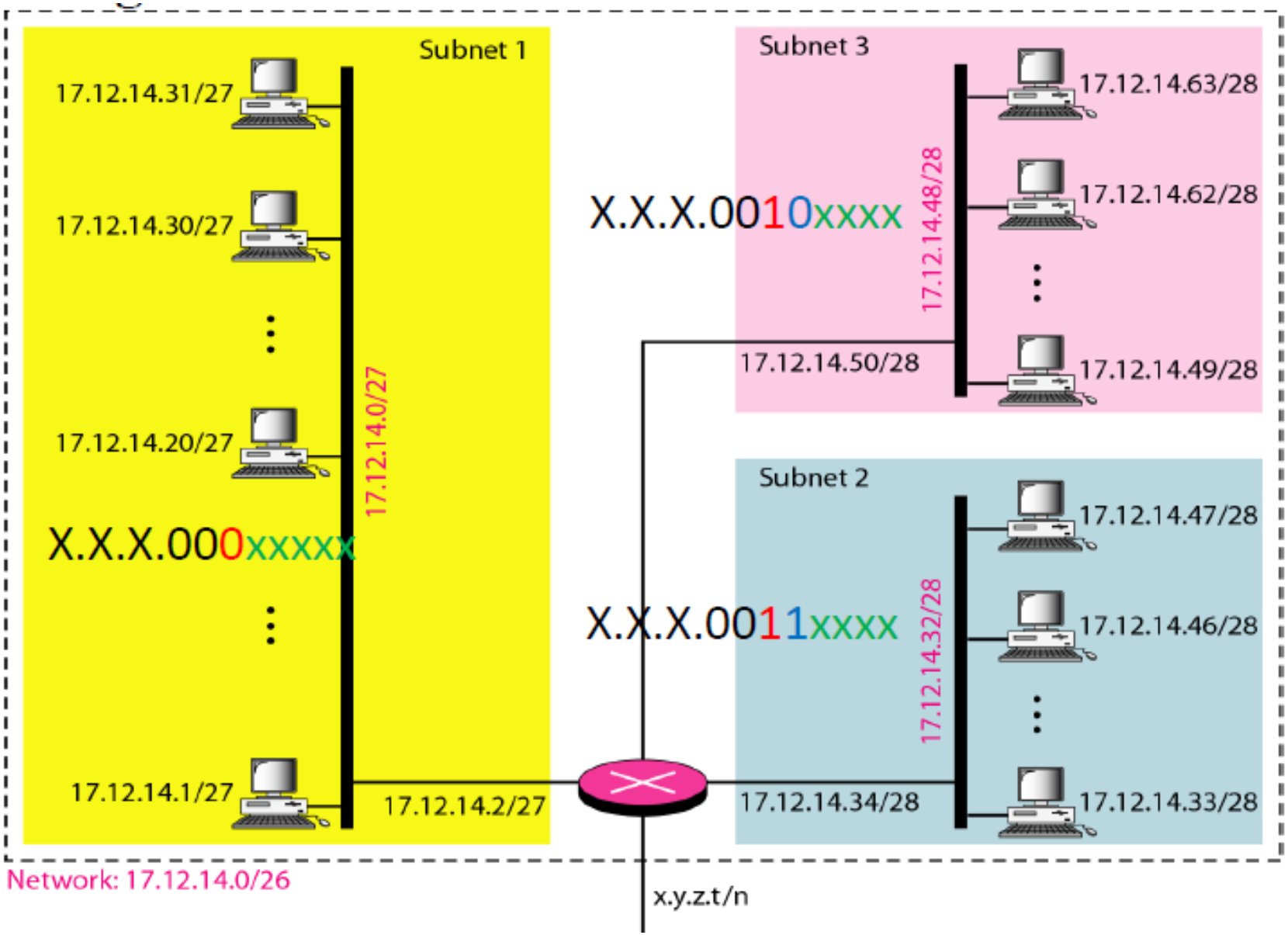

No addresses are left as all addresses have been allocated.

In classless addressing, an address can belong to many blocks (depending on value of prefix associated with that block).

➢e.g., consider the address 230.8.24.56

It can belong to many blocks

Prefix length	Block	
	From	To
16	230.8.0.0	230.8.255.255
20	230.8.16.0	230.8.31.255
26	230.8.24.0	230.8.24.63
27	230.8.24.32	230.8.24.63
29	230.8.24.56	230.8.24.63
31	230.8.24.56	230.8.24.57

Example

An organization is granted a block of addresses starting with 14.24.74.0/24.
The organization needs to have three sub-blocks of addresses to use in its three subnets:

- one sub-block of 10 addresses,
- one sub-block of 60 addresses, and
- one sub-block of 120 addresses.

Design the sub-blocks and find out how many addresses are still available after these allocations.

The first address in this subnet is 14.24.74.0/25
last address is 14.24.74.127/25

Route 193.205.102.36

193								205								102								36							
1	1	0	0	0	0	0	1	1	1	0	0	1	1	0	1	0	1	1	0	0	1	1	0	0	0	1	0	0	1	0	0

Class C address;
Outside private domain routed with mask 255.255.255.0

network																								host							
193								205								102								36							
1	1	0	0	0	0	0	1	1	1	0	0	1	1	0	1	0	1	1	0	0	1	1	0	0	0	1	0	0	1	0	0

Inside private domain, administrator has set netmask 255.255.255.248

255								255								255								248							
1	1	1	1	1	1	1	1	1	1	1	1	1	1	1	1	1	1	1	1	1	1	1	1	1	1	1	1	1	0	0	0

Hence, route to subnet address and then to host id, computed as:

network																								subnet					host		
1	1	0	0	0	0	0	1	1	1	0	0	1	1	0	1	0	1	1	0	0	1	1	0	0	0	1	0	0	1	0	0
193.205.102.32 /29																													4		